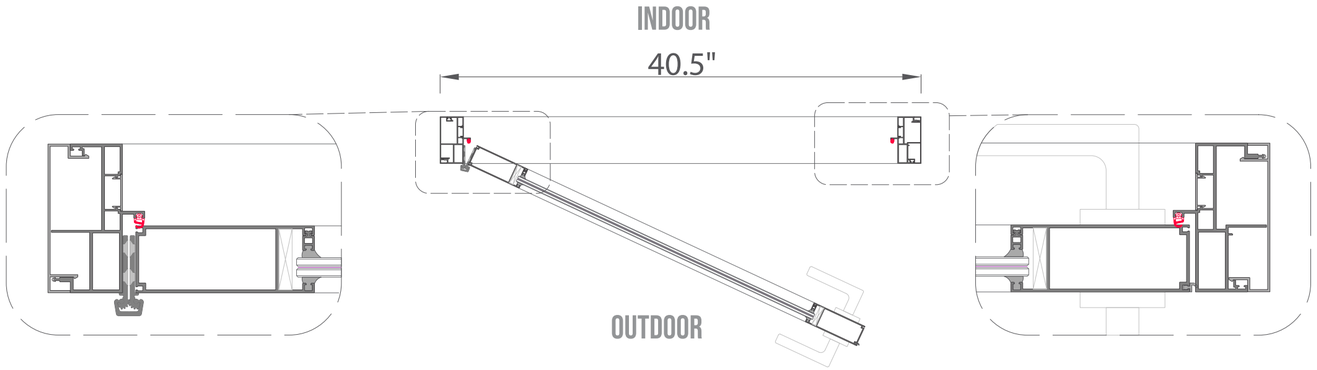

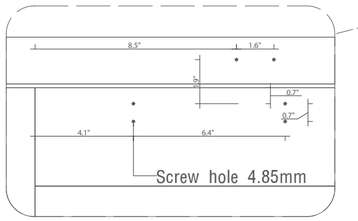

Note:
Holes for interior door closers

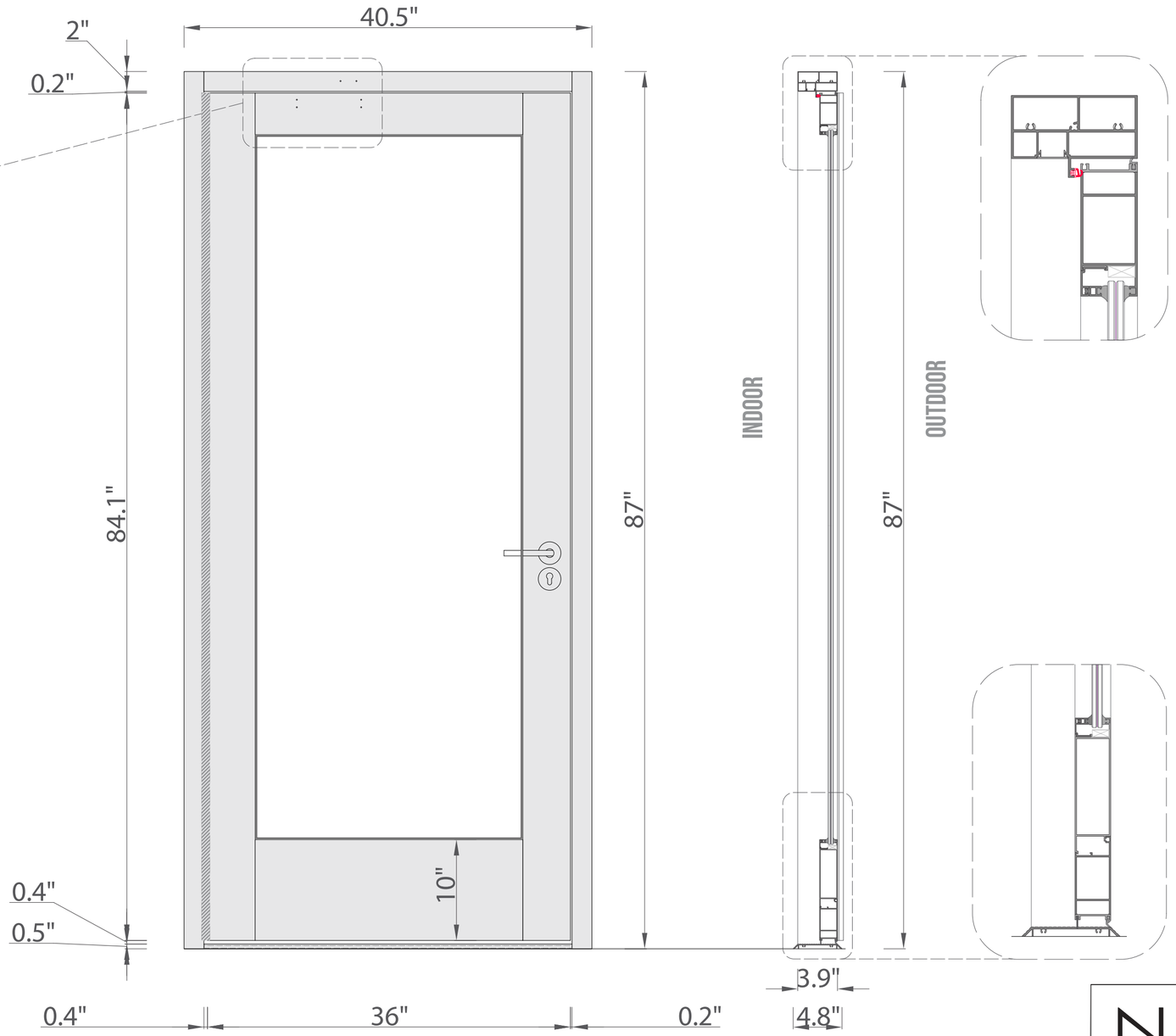

1. These drawings are provided for reference and design intent only. They do not constitute construction documents and shall not be used for building permit applications unless specifically noted.
2. All dimensions shown are nominal and subject to standard manufacturing tolerances of ±1/16" unless otherwise noted. Actual product dimensions may vary.
3. It is the responsibility of the contractor/installer to field-verify all rough opening dimensions, structural conditions, and site conditions prior to ordering or fabrication. Nixa Doors assumes no liability for discrepancies between drawing dimensions and actual field conditions.
4. Nixa Doors reserves the right to make design and specification changes without prior notice. Always confirm current specifications with the Nixa sales team before ordering.
5. These drawings are not to be scaled. Use written dimensions only. If dimensions are missing or unclear, contact Nixa Doors for clarification before proceeding.

NIXA ENTRANCE SYSTEMS
Innovative Solutions for Every Commercial Space

ADDRESS: 1544 E Warner
Santa Ana
TEL: (818) 804-3344
WEBSITE: www.Nixadoors.com
EMAIL: Sales@nixadoors.com

DRAWN BY: Kai Farzam

REVISION

A		C	
B		D	

N100 Interior Storefront Door System

DATE:	SHEET NO.	FILE:

IMPORTANT: These drawings are the exclusive property of Nixa Doors and are protected under U.S. copyright law. Reproduction, distribution, or reuse in whole or in part without the express written consent of Nixa Doors is strictly prohibited. All rights reserved. © 2026 Nixa Doors.